SPECIFICATION APPLIED

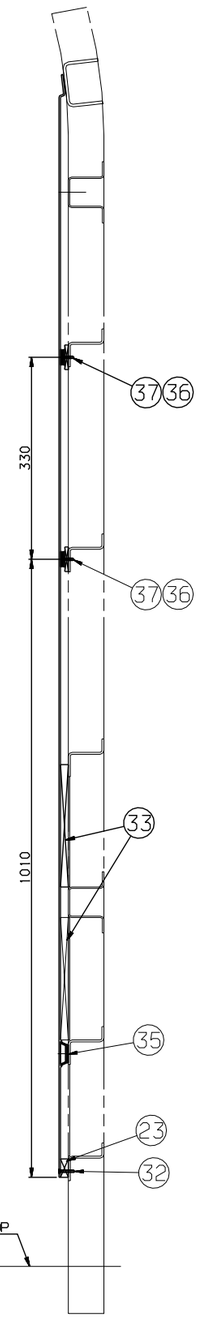

SECTION J-J
SCALE=1/5

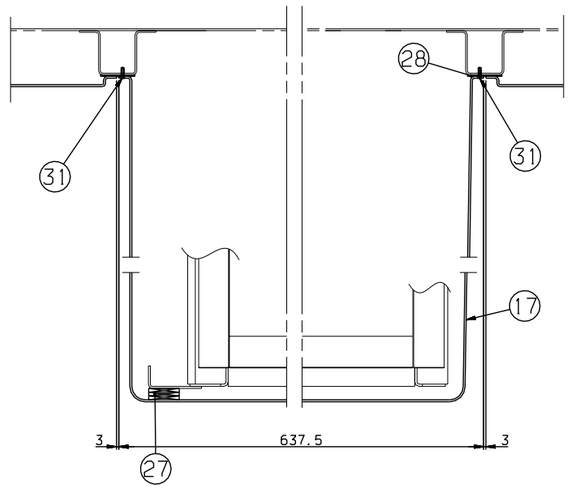

SECTION H-H
SCALE=1/3

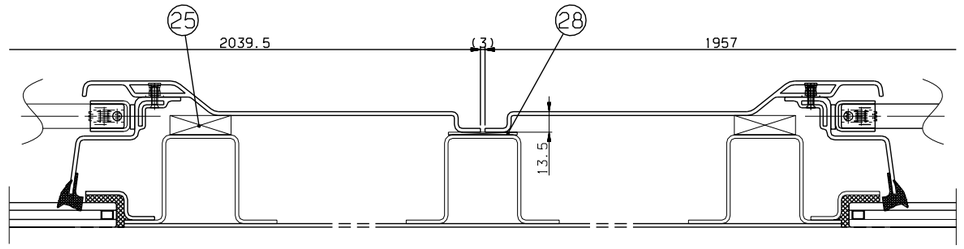

SECTION L-L
SCALE=1/2

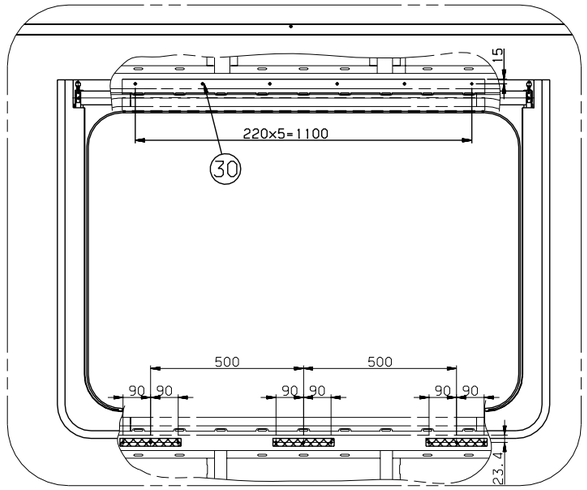

DETAIL K
SCALE=1/10

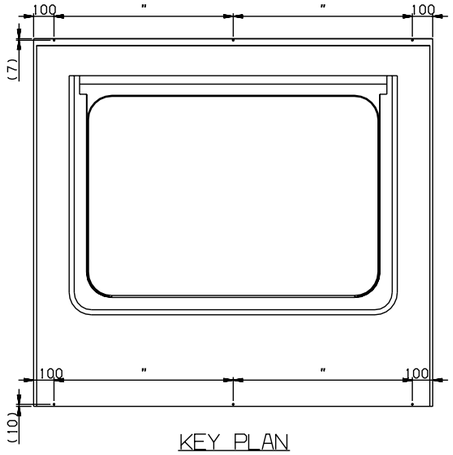

KEY PLAN
(WINDOW MASK FITTING)

NOTE
1. PACKING SHOULD BE BONDED TO FRAME AT THE CONTACT PLACE(PANEL/FRAME)
2. SIDE INTERIOR PANEL SHOULD BE FITTED WITH ADHESIVE BEFORE FIXED THE SCREW.
3. FIXING SCREW SHOULD BE MAINTAINED DISTANCE IN ORDER TO BE OUT OF SIGHT BY A MOLDING.
4. THE PACKING WHICH IS FITTED WITH ADHESIVE COULD BE ADJUSTABLE ACCORDING TO THE WIDTH AND THICKNESS.
5. THE MANUFACTURER SHOULD BE SUPPLIED THE INTERIOR PANEL ON THE CAR BASE WITH MARKED PART NO.

주조 CASTING			
	~ 40	2	4
	~ 30	2	3
	~ 10	1	1.5
	< 3	0.5	1
리브 RIB	~3150	-	7
	~1600	4	5
	~ 800	3	4
	~ 400	2	3
	~ 200	1.5	2
	~ 100	1	1.5
등급 GRADE		A	B
주철, 주강품 CASTING (±)			
~20M	8	14	24
~15M	7	12	21
~12M	6	10	18
~8M	5	8	14
~4M	4	6	11
~2M	3	4	8
~1M	2	3	6
~315	1	2	4
~120	1	2	3
~30	1	1	1
등급 GRADE	A	B	C
용접 구조물 WELDING (±)			
~20M	-	6.0	8.0
~15M	-	5.0	7.0
~12M	-	4.0	6.0
~8M	-	3.0	5.0
~4M	0.8	2.0	4.0
~2M	0.5	1.2	3.0
~1M	0.3	0.8	2.0
~315	0.2	0.5	1.2
~120	0.15	0.3	0.8
~30	0.1	0.2	0.5
3~6	0.05	0.1	0.2
등급 GRADE	A	B	C
기계 가공품 MACHINING (±)			
일반허용차 GENERAL TOLERANCE			

	NO.	PART NO.	DESCRIPTION	MATERIAL	Q'TY	W.T	REMARKS
A	40	RFP51412EJ0	PANEL,FUNNEL,TYPE D	ASSY	1		
	39	RFP51301EJ0	COVER,ENGINE FILTER,FITTING	ASSY	1		
	38	RFP50201EJ0	PANEL,COVER SPEAKER,FITTING	ASSY	1		
	37	RS60607-099S	SCREW,F.H	SUS304	144		M4x16
	36	RFP50002EJ0-036	PACKING	CR	1		T5.7x40x40000 MS39000-004(SC70-F2(CR))
	35	RFP50002EJ0-035	PACKING	CR	1		T2.2x30x35000 MS39000-004(SC70-F2(CR))
	34	RFP50002EJ0-034	PACKING	CR	1		T3x30x1300 MS39000-004(SC70-F2(CR))
	33	RFP50002EJ0-033	PACKING	CR	1		T12.7x200x3800 MS39000-004(SC70-F2(CR))
	32	RS60607-101S	SCREW,F.H	SUS304	48		M4x25
	31	RFP50002EJ0-031	SCREW,F.H	SUS304	32		M4x14 (HEAD=M3)
	30	RS60607-097S	SCREW,F.H	SUS304	110		M4x12
	29	RS60607-100S	SCREW,F.H	SUS304	66		M4x20
	28	RFP50002EJ0-028	PACKING	CR	1		T1.7x40x40000 MS39000-004(SC70-F2(CR))
	27	RFP50002EJ0-027	PACKING	CR	1		T5x40x17000 MS39000-004(SC70-F2(CR))
	26	RFP50002EJ0-026	PACKING	CR	1		T2x30x36000 MS39000-004(SC70-F2(CR))
	25	RFP50002EJ0-025	PACKING	CR	1		T12.7x40x58000 MS39000-004(SC70-F2(CR))
	24	RFP50002EJ0-024	PACKING	CR	1		T2.2x85x35000 MS39000-004(SC70-F2(CR))
	23	RFP50002EJ0-023	PACKING	CR	1		T12.7x30x35000 MS39000-004(SC70-F2(CR))
	22	RFP53002AN0	PANEL,CEILING,FITTING(M)	ASSY	1		
	21	RFP55008AN0	PANEL,FLUORESCENT,DECORATION FITTING(M)	ASSY	1		
	20	RFP55002AN0	PANEL,FLUORESCENT,FITTING(M)	ASSY	1		
	19	RFP54002AN0	PANEL,CORNER,FITTING(M)	ASSY	1		
A	~~18~~	~~RFP50023AN0~~	~~PANEL,FUNNEL,TYPE D~~	~~ASSY~~	~~1~~		
	17	RFP50022AN0	PANEL,FUNNEL,TYPE C	ASSY	1		
	16	RFP51135EJ0	WINDOW,MASK,TYPE DD	ASSY	1		
	15	RFP51034AN0	WINDOW,MASK,TYPE CC	ASSY	1		
	14	RFP53009AN0	PANEL,MIDDLE CEILING,FITTING(M)	ASSY	1		
	13	RFP51132EJ0	WINDOW,MASK,TYPE AA	ASSY	2		
	12	RFP51131EJ0	WINDOW,MASK,TYPE Z	ASSY	1		
	11	RFP51130EJ0	WINDOW,MASK,TYPE Y	ASSY	1		
	10	RFP50301EJ0	PANEL,COVER INDICATOR,FITTING	ASSY	1		
	9	RFP51028AN0	WINDOW,MASK,TYPE W	ASSY	2		
	8	RFP51127EJ0	WINDOW,MASK,TYPE V	ASSY	1		
	7	RFP51126EJ0	WINDOW,MASK,TYPE U	ASSY	1		
	6	RFP51125EJ0	WINDOW,MASK,TYPE T	ASSY	1		
	5	RFP51124EJ0	WINDOW,MASK,TYPE S	ASSY	1		
	4	RFP51123EJ0	WINDOW,MASK,TYPE R	ASSY	1		
	3	RFP51122EJ0	WINDOW,MASK,TYPE O	ASSY	1		
	2	RFP51021AN0	WINDOW,MASK,TYPE P	ASSY	1		
	1	RFP51020AN0	WINDOW,MASK,TYPE O	ASSY	1		

승인 APP	제도 DRG	설계 DGN	검도 CHK
JeongYul Lee 2014.10.02	HeeSook Jeong 2014.10.02	HeonUk Lee 2014.10.02	KeongBong Park 2014.10.02

재질 MAT'L ASSY
중량 G.W
설변 실치 MC VD CT
B
SIZE A1

TITLE 명 칭 INSTALLATION, INTERIOR PANEL M CAR (3/3)
도면 번호 DRG. NO RFP50002EJ0 Ver. 00 Rev. -A
SCALE 1/40 매수 SHEET 3 of 3

RSD1402
RFP-
난-PRJT
CATIA

기호 MARK	일자 DATE	변경내역 DETAIL OF REVISION(E.C ZONE)	설변번호 E.C NO.	설계 DGN	검도 CHK	승인 APP
Ax3	2015.02.09	CHANGED ITEM (18 -> 40)	RSD1402-U086	H.U.LEE	J.W.BAE	H.G.RYU

참고번호 REF. NO.

본 도면은 당사 재산권의 일부로서 무단복사/배포 금지됨. PROPERTY OF ISSUING ENTITY, CANNOT BE DISTRIBUTED OR REPRODUCED WITHOUT AUTHORIZATION.

HYUNDAI Rotem 현대로템주식회사